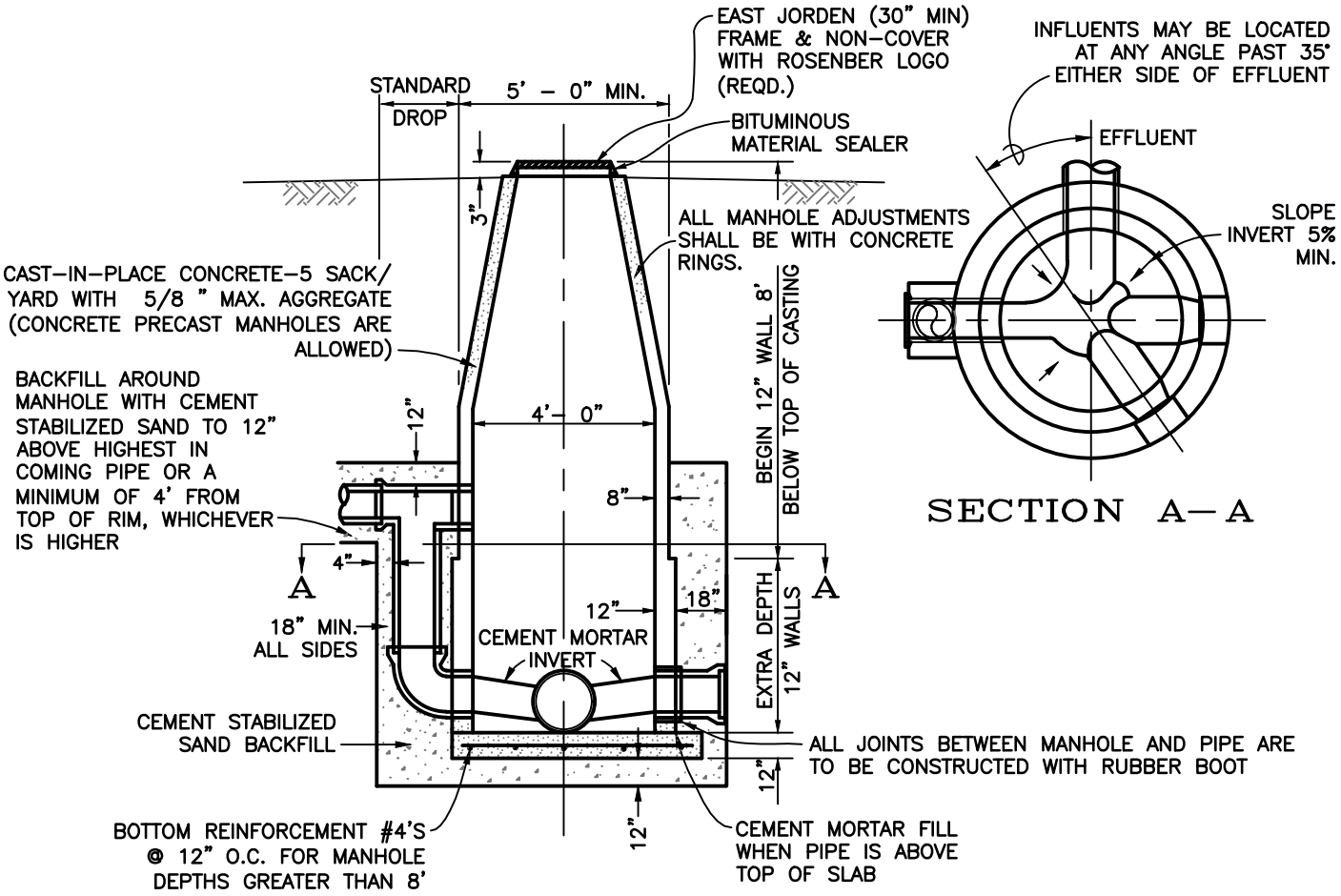

ELEVATION VIEW

NOTES:

1. ALL SANITARY MANHOLE COVERS SHALL BE LABELED "ROSENBERG TEXAS" AND "SANITARY" AND INCLUDING THE SPECIFIED LOGO.
2. MINIMUM ELEVATION OF TOP OF ALL INFLUENT LINES SHALL BE EQUAL TO TOP OF THE EFFLUENT LINE. SHAPE INVERT TO MATCH ALL LINES.
3. MANHOLE MAY BE CONSTRUCTED USING PRECAST CONE AND BOTTOM. BRICK WILL NOT BE ALLOWED.
4. *INSIDE OF ALL MANHOLES SHALL BE COATED WITH EPOXY LINER APPLIED IN ACCORDANCE WITH THE MANUFACTURER'S RECOMMENDATION (80 MIL MINIMUM THICKNESS IN RESIDENTIAL AREAS; 120 MIL MINIMUM THICKNESS IN COMMERCIAL/INDUSTRIAL AREAS).* REFERENCE THE CITY OF ROSENBERG DESIGN STANDARDS FOR APPROVED EPOXY LINERS.
5. GROUT JOINTS AND SEAL WITH COATING.
6. RUBBER GASKET JOINTS ARE TO BE USED ON ALL PRECAST MANHOLE APPLICATIONS.

THE CITY OF ROSENBERG, FORT BEND COUNTY, TEXAS
DEPARTMENT OF PUBLIC WORKS

SANITARY SEWER MANHOLE

DESIGN:	CAD:	SCALE:	DATE:	DRAWING:
CAK	STAFF	NTS	05/20	S–105